31 584 SD0 **K800 STAINLESS STEEL SINK**

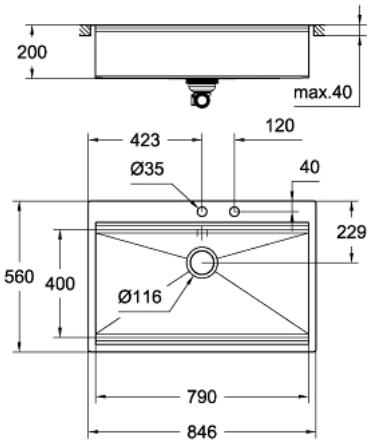

PRODUCT DESCRIPTION

- Colour: stainless steel
- model: K800 90-S 84.6/56 1.0
- mounting type: flush mount
- material: stainless steel AISI 304 (V2A)
- material thickness: 1 mm
- GROHE Long-Life finish
- finish: satin finish
- GROHE Whisper
- min. cabinet size: 900 mm
- dimensions: 846 x 560 mm
- 1 bowl: 790 x 400 x 200 mm
- GROHE FastFixationInstallation system
- drainer: automatic waste fitting
- accessories included: automatic waste fitting with rotary handle,waste kit, basket strainer waste, mounting set
- amount of fasteners included (flush mount): 18
- outer radius: R10, inner bowl radius: R0

31 584 SD0 **K800 STAINLESS STEEL SINK**

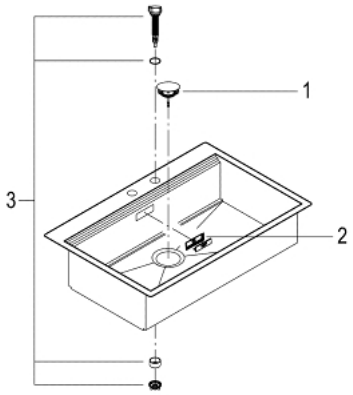

UNITS PER PACKAGE , September 2017 – now

1: Plug (Spare part-nr. 42577SD0)

2: Cover element (Spare part-nr. 42578SD0)

3: Turning handle (Spare part-nr. 42573SD0)

4: Plug (Spare part-nr. 42576SD0)