31 360 DC1 **MINTA TOUCH ELECTRONIC SINGLE-LEVER SINK MIXER 1/2"**

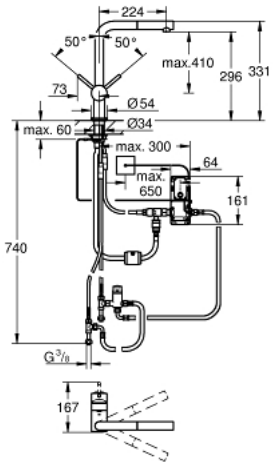

PRODUCT DESCRIPTION

- Colour: Supersteel
- L-spout
- Touch: activation of water via skin contact
- battery power supply 6 V,lithium-battery, type CR-P2
- CE approved
- solenoid valve
- fixed value mixing valve
- automatic safety stop 60 sec.(factory pre-set)
- type of protection IP 44
- GROHE SilkMove 46 mm ceramic cartridge
- pull out mousseur spout
- automatic reverse to mousseur
- adjustable flow rate limiter
- swivelling tubular spout
- selectable swivel area : 0° / 150° / 360°
- Protected against backflow
- flexible connection hoses
- rapid-installation-system
- maximum flow rate (at 3 bar): 10 l/min

31 360 DC1 **MINTA TOUCH ELECTRONIC SINGLE-LEVER SINK MIXER 1/2"**

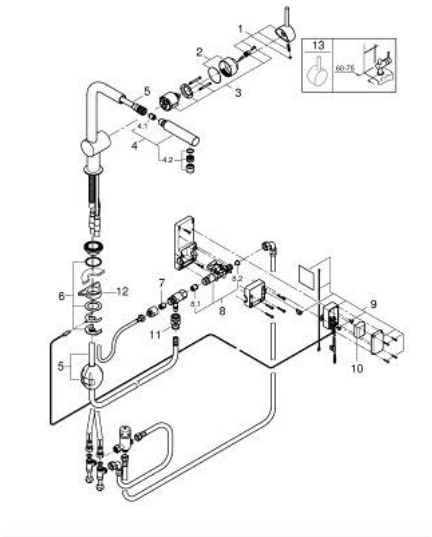

UNITS PER PACKAGE , September 2023 – now

1: Lever (Order-nr. 46015DC0)

2: Shield (Order-nr. 46025DC0)

3: Cartridge (Order-nr. 46048000)

4: Hand shower (Order-nr. 46858DC0)

4.1: Non-return valve (Order-nr. 08565000)

4.2: Mousseur (Order-nr. 13967DC0)

5: Shower hose (Order-nr. 48293000)

6: Shank mounting kit (Order-nr. 46345000)

7: Non-return valve (Order-nr. 08565000)

8: Solenoid valve (Order-nr. 48213000)

8.1: Non-return valve (Order-nr. 08565000)

8.2: Dirt strainer (Order-nr. 42395000)

9: Control unit (Order-nr. 48214000)

10: Battery (Order-nr. 42886000)

11: Snap coupling (Order-nr. 46338000)

12: Support plate (Order-nr. 05334000)

13: Lever (Order-nr. 40684DC0)*

* Optional accessories