26 453 001 **TEMPESTA COSMOPOLITAN SYSTEM 200 FLEX SHOWER SYSTEM WITH DIVERTER FOR WALL MOUNTING**

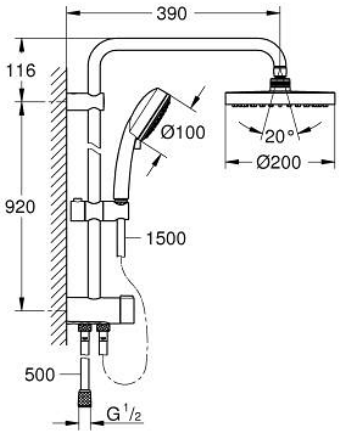

PRODUCT DESCRIPTION

- Colour: chrome
- consists of:
- horizontal 390 mm shower arm, adjustable before installation
- change by diverter between hand shower, head shower or head shower Eco setting
- head shower Tempesta Cosmopolitan 200 (27 541)
- 2 spray patterns (via diverter):
- Rain, SmartRain
- with ball joint
- angle of rotation ± 15°
- hand shower Tempesta Cosmopolitan 100 (27 573)
- 4 spray patterns
- GROHE Rain O², Rain, Massage, Jet
- adjustable in height with gliding element
- distance between diverter and upper bracket: 920 mm
- Relexaflex shower hose 1500 mm (28 151)
- shower hose Relexaflex 500 mm
- flexible installation: connection to faucet / wall union for water supply with 1/2" thread of the 500 mm shower hose
- minimum flow rate 7 l/min.
- GROHE DreamSpray perfect spray pattern
- GROHE Long-Life finish
- SpeedClean anti-lime system
- Inner WaterGuide for a longer life

26 453 001 **TEMPESTA COSMOPOLITAN SYSTEM 200 FLEX SHOWER SYSTEM WITH DIVERTER FOR WALL MOUNTING**

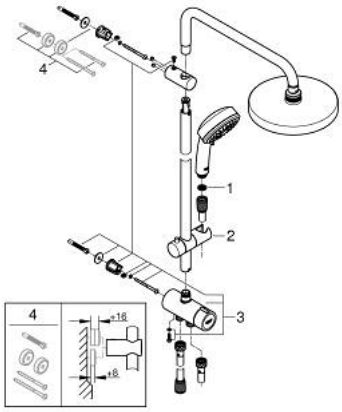

UNITS PER PACKAGE , March 2017 – now

1: Dirt strainer (Order-nr. 0700200M)

2: Sliding piece (Order-nr. 12140000)

3: Diverter (Order-nr. 48338000)

4: Compensation disc (Order-nr. 26496000)*

* Optional accessories