23 726 003 **EUROSTYLE SINGLE-LEVER BATH/SHOWER MIXER**

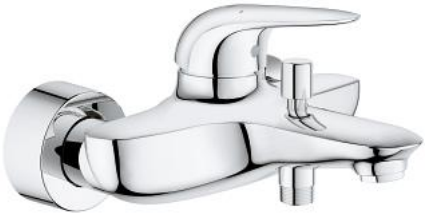

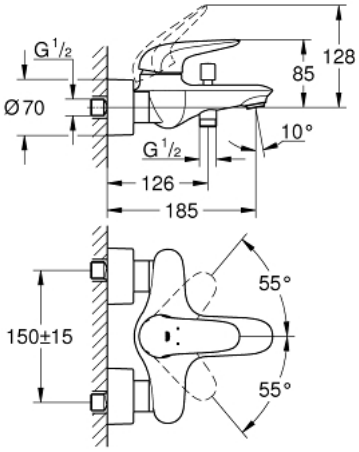

PRODUCT DESCRIPTION

- Colour: chrome
- wall mounted
- solid metal lever
- GROHE SilkMove 35 mm ceramic cartridge
- with temperature limiter
- GROHE Long-Life finish
- adjustable flow rate limiter
- automatic diverter: bath/shower
- mousseur
- shower outlet 1/2" with integrated non-return valve
- covered S-unions
- Protected against backflow

23 726 003 **EUROSTYLE SINGLE-LEVER BATH/SHOWER MIXER**

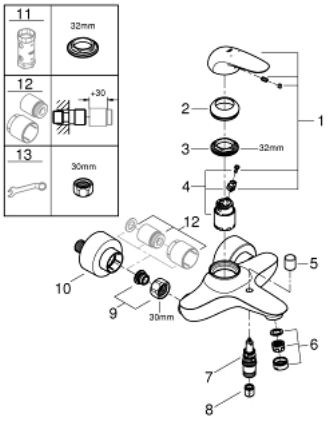

UNITS PER PACKAGE , November 2015 – now

1: Solid metal lever (Order-nr. 46954000)

2: Shield (Order-nr. 46436000)

3: Screw coupling (Order-nr. 46460000)

4: Cartridge (Order-nr. 46374000)

5: Diverter knob (Order-nr. 64309000)

6: Mousseur (Order-nr. 13952000)

7: Diverter (Order-nr. 65655000)

8: Non-return valve (Order-nr. 48276000)

9: Screw joint (Order-nr. 45044000)

10: S-union (Order-nr. 12693000)

11: Socket spanner (Order-nr. 19332000)*

12: Extension set 1/2", 30 mm (Order-nr. 46238000)*

13: Special spanner (Order-nr. 19377000)*

* Optional accessories