20 164 GL3 **ATRIO 3-HOLE BASIN MIXER**

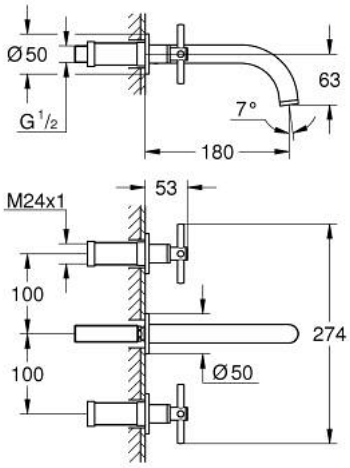

PRODUCT DESCRIPTION

- Colour: cool sunrise
- wall mounted
- without concealed body
- final installation set for
- 29 025 002
- valves hot/cold with ceramic headparts 1/2" - 90°
- GROHE Long-Life finish
- GROHE Water Saving 5.7 l/min laminar mousseur
- centre distance 200 mm
- projection 180 mm
- with cross handles
- Two different sets of caps included. One set with "H" and "C" marking, one set without marking.